Surveying & Built Environment

Surveying and Built Environment Vol 18 (1), 51-62 June 2007 ISSN 1816-9554

Reducing Waste in High-Rise Residential Buildings by Information Modelling at the Design Stage

Andrew N Baldwin[1] and Simon A Austin and Chi-sun Poon and Li-yin Shen and Irene Wong

ABSTRACT

High-rise building is characterized by its repetitive design in floor plan which is compartmentalized into individual units. The design of high-rise buildings is different from other forms of residential and commercial buildings because of the repetition of construction and the cycle-time for the completion of each floor. This paper describes research that has been carried out to investigate how information modelling and an optimization technique known as Design Structure Matrix, DSM, application can increase the design efficiency of a repetitive high-rise building for both private and publically funded buildings. These benefits are accrued for both 'first generation' and subsequent 'repeat' buildings. In addition to helping to eliminate 'waste' within the design process the techniques contribute to the elimination of waste within the construction process.

KEYWORDS

Information Modelling
Design Management
Waste Reduction
Analytical Design Planning Technique

[1]*Ir Professor Andrew Baldwin*
Dean of Faculty of Construction & Land Use
Chair Professor of Building
The Hong Kong Polytechnic University
Hunghom, Kowloon, Hong Kong
E-mail: bsanb@polyu.edu.hk

INTRODUCTION

The majority of people in Hong Kong live in high-rise residential buildings, these buildings may be publicly or privately owned. In Hong Kong the Hong Kong Housing Authority provides 682,300 public rental housing flats which provide living accommodation for one third of the population. (HKHA 2007) These types of buildings are characterised by their standardized layouts and standard design details. Design for each floor of the residential building is repetitive, similar housing blocks are typically co-located to form large estates, e.g. at Tsuen Mun and Yuen Long. The same design of building is commonly used on different estates. Modifications to standard designs are required to reflect the individual site conditions and to meet the needs of residents in the form of the provision of facilities at ground floor level where social welfare associations and/or administrative offices may be provided. Private residential developments may comprise several housing blocks or be single buildings whose 'footprint' and floor layout needs to meet the specific shape of the site. They are usually of a higher specification and provide additional facilities such as 'residents clubs' often at mid-height. The architectural, structural and building services design are usually more complicated.

The design of both public and private residential buildings follows established stages from inception to construction. Documentation typically comprises project manuals, instructions and guidelines in the form of standard layouts and details amended to produce a set of project documentation. Simple flowcharts are used to monitor the design process. No specific software for design planning other than normal desktop software is normally used by the design team.

The research reported in this paper shows how the use of information modelling and design management techniques, may be applied to model the information requirements of designers of high-rise residential buildings. The use of these techniques enables the designers to optimize the design process by ensuring that the information required in the design process is produced at the appropriate time to meet the needs of both the design team and the construction team. This ensures that 'waste' is eliminated in both the design and the construction process. Design waste is eliminated by ensuring that there are no delays in the design process due to designers waiting for information and by eliminating repetitive work. Waste at the construction stage is eliminated by ensuring the timely delivery of design information to site. The models produced form a basis for further research and modelling of the impact of design decisions.

OBJECTIVES AND METHODOLOGY

The objectives of the research were: to develop models of the detailed design process for high rise residential buildings; to develop tools and techniques for analyzing these information requirements; to investigate the differences in the models and the use of the models when the building design was 'new' and when subsequent 'standard' or repetitive designs were being considered; to investigate the differences in the models required for private residential buildings and to show how the techniques may be used to eliminate waste within both the design and the construction process.

To achieve these objectives the following methodology was adopted. The information needs of designers were identified from previous research and by interviews with practitioners who were involved in the design of high-rise residential buildings. Design process models were produced using the generic design process model already produced by members of the research

team. These models were validated by expert review and comparison with existing projects.

The Analytical Design Planning Technique was used to analyse information requirements and to sort design tasks into an optimized sequence. A number of different design scenarios were used to illustrate how the approach may be used on a typical building design for private and public funded projects. (The New Harmony Design, a common building design adopted by the Housing Authority, was chosen as the type of building for modelling of the public funded building.) Feedback on the models produced during the research and their potential for the management of the design process and saving waste was obtained from industry practitioners. This feedback was used to validate both the models and the findings.

THE ANALYTICAL DESIGN PLANNING TECHNIQUE

The Analytical Design Planning Technique enables the planning of building design to be approached in a more systematic manner through the use of process modelling to produce a model of the information required, analysis of the models by a technique known as the Design Structure Matrix, and the production of design programmes. It provides a way to understand the entire design process by taking a systems view to design. The techique improves the efficiency of the design process by reducing the level of iteration in design tasks, providing an understanding of the effects of change and reducing abortive work. It enables the constraints of earlier design and subsequent construction processes to be managed.

The technique may be viewed as a four stage technique. The first stage involves the production of a model of the design process which identifies the design tasks involved and the information requirements for each of these tasks. (To assist with this task a generic model of the information required at the detailed design stage of a building design comprising some 106 tasks and 104 information flows is available.) The second stage transfers the data into a matrix form, (the Dependency Structure Matrix, DSM), which is used to identify loops within the iteration process. The third stage is the re-arrangement of the task order to break down the iteration block producing an optimised DSM. (This enables the programme for the design of the building to be revised based on the optimized design process. The fourth stage enables the output from the DSM

Figure 1 An example of the design tasks and information requirements within the Generic Model (Austin et al, 1999)

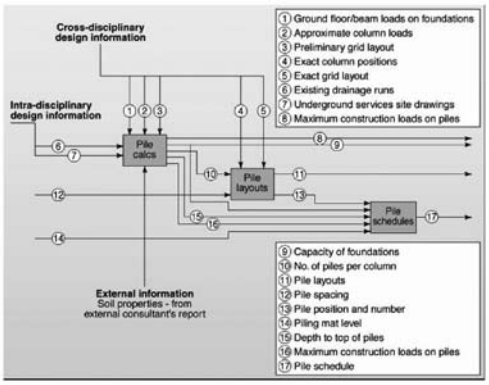

Figure 2 The four stages of the Analytical Design Planning Technique in diagramatic form (Austin et al, 2000)

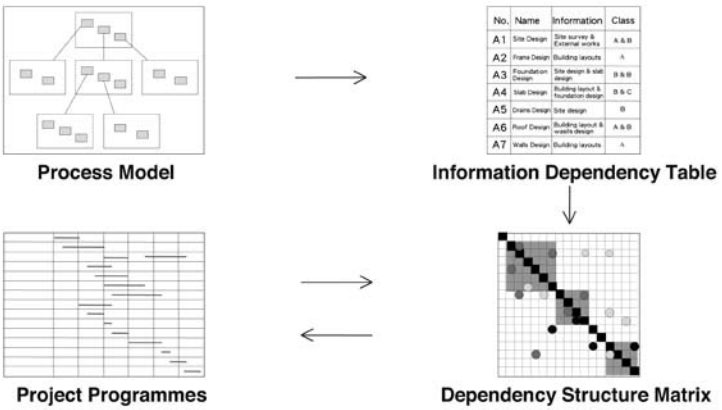

matrix to be input into a conventional project planning software package. Figure 1 shows elements from the model. Figure 2 shows the four stages of the Analytical Design Planning Technique in diagramatic form. Full details of the technique may be found in Austin et al, 1999, 2000, 2002 & 2004; Baldwin et al, 2005; Browning, T., 2002.

MODELLING THE DESIGN OF THE 'NEW HARMONY' BUILDING

The generic detailed design model was used to produce a model for the New Harmony type of building. The model was reviewed and revised by deleting design activities from the generic model that were not required for the New Harmony Building type and adding any new design tasks or information requirements for this type of building. Examples of these amendments are as follows: The New Harmony Block is normally constructed on piled foundations, therefore all other types of foundations within the generic model were deleted: there was no basement within the design; there was no chilled water system design; no hot water system was included (each unit was provided with a gas heater connection point); there was no provision of compressed air system; no steam system; no emergency power is provided; the ground floor slab was designed as a suspended floor slab; and design for the commercial complex on the ground floor of the building had to be included; etc. For a full list of the amendments see Baldwin et al, (2005).

The generic ADePT detailed design model was changed to include all the above features. The new model was designated NHB (0). This model was validated against the detailed design and specification of the Master Design Manual of the Housing Department and by review from experienced professional designers within the Housing Authority. The model was divided into separate sections including architectural, civil engineering, structural and building services design and checked by representatives of each of these different disciplines. Each discipline was requested to indicate the importance of the information to each design task by rating the information as either A, B or C. (Rating A indicating the greatest influence on the design activities; B a moderate influence whilst C indicated minimum importance. This rating is important within the design structure matrix analysis as it assists in determining the prioritization of tasks.) The returns were compiled in the new summary model HB (1). This model represents 'initial' design or 'first generation' design of the building.

ANALYSIS OF THE MODELS

The data within the model were analysed to identify the optimised design process of the first generation model, NHB (1), and then examine the differences, compared with the model for subsequent designs, NHB (2). The NHB (1) model data were processed using the Dependency Structure Matrix of the analytical design planning technique and the order of the design tasks optimised. Analysis of this model showed the optimised design process similar to any general residential building development project. The five design tasks with the greatest number of outputs identified were: Ground floor setting out GAs; Upper floor setting out GAs; Upper floor spatial co-ordination Gas; Building section Gas; Finishes schedule.

These five tasks are all architectural design tasks indicating that architectural design is the dominating design task on which other design disciplines depend and any subsequent changes in the architectural design will create rework or even abortive works. The matrix analysis shows that the civil engineering design is the least dependant on the architectural design. Building services design is highly dependant upon architectural design. Four main 'iterative' design activities are identified. These are: Ground floor spatial co-ordination arrangements; Upper floor spatial co-ordination arrangements; Internal walls layout types, etc. and the Finishes schedule.

The optimized model NHB (1) _OPT included a main iterative loop of 46 design tasks. Building design is a multi-disciplinary process involving exchange of information. The optimized model showed how the optimal relationship of the information produced for the different disciplines to work together in the design process. In our example the Architect needs to work along with Civil Engineer, Structural Engineer and Building Services Engineer in the detail design as indicated in row nos. 32 to 62 of the matrix. If different disciplines can work together efficiently and effectively in the early architectural design stage providing clear and accurate information, the time wasted in re-work or even abortive work will be greatly minimized. The optimized model is shown in Figure 3.

Figure 3 NHB (1)_OPT: Generic Building Design Model (Summary) for New Harmony Block Optimized

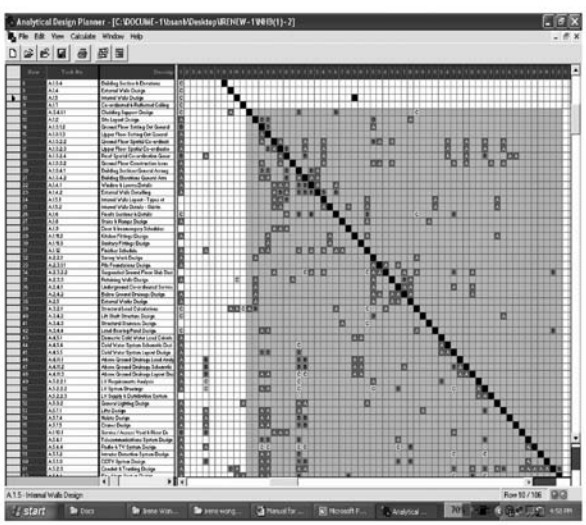

The analysis above of the NHB (1) model shows the design requirements for the design of a 'new' building i.e. a building type that is being designed for the first time. As stated earlier in the paper the New Harmony design has now become a standard design for residential buildings in Hong Kong. Therefore the research considered the differences for repeat building design for different locations.

ANALYSIS OF THE NHB (2) MODEL

To assist the design of 'standard' buildings and to improve efficiency, the Housing Authority adopted the use of standard building design details. Because standard designs are adopted for the design the importance of the information requirements is reduced within the design process as all parties are aware of the design details. To model this effect the NHB (1) model was revised by downgrading the importance of the standardized design tasks to "C" as this standard information becomes readily available design information filed in the standard design detail drawing and specification. This revised model was called the NHB (2). A review of the matrix of NHB (2) model, shows 5 design tasks with the highest number of information requirements: Site layout plan; Ground floor setting out GA; Survey works design; Structural load calculations; and above ground drainage schematics.

Out of these 5 tasks, 2 are architectural design, 1 from civil engineering design, 1 from structural engineering and 1 from mechanical engineering design. The difference in this list from the NHB (1) model is explained as follows. After standardization architectural design becomes less dominant in the design process as a large portion of architectural design is standardized. Class A tasks above the diagonal are greatly reduced. Standard details form a large portion of the design, therefore change in design becomes less apparent and rework or abortive work is greatly reduced. The inter-dependency between different task activities and different disciplines becomes much smaller.

Optimization of NHB (2) forms NHB (2) _OPT and reduces the size of the iterative loop. (see Figure 4) The reduced loop includes architectural, civil engineering and mechanical engineering design tasks. Civil engineering design is important by its occupied portion. In standard design, standard details are provided in architectural, structural and building services design for the domestic blocks. However as each site location and site condition is unique, the site planning and hence civil engineering design cannot be standardized, therefore external work design and civil engineering design dominates the design process.

PRIVATE RESIDENTIAL BUILDING

To investigate the differences in requirements for private residential buildings the generic model was amended to meet the requirements of an actual private residential development. A new model PHR (0) was produced and validated. The model was optimized using the analytical design planning technique and compared with the New Harmony models.

The standard of apartments in private residential developments can vary considerably depending on the location and the prestige of the development. A commercial complex may be annexed to the residential blocks. Our study concentrated on the residential design. The Generic Building Design Model was modified to incorporate the following design characteristics: a club house and a car park for resident use, (at podium level); a club house occupying several floors with changing

Figure 4 NHB (2)_OPT: Generic Building Design Model (Summary) for New Harmony Block adjusted for standard design (optimized)

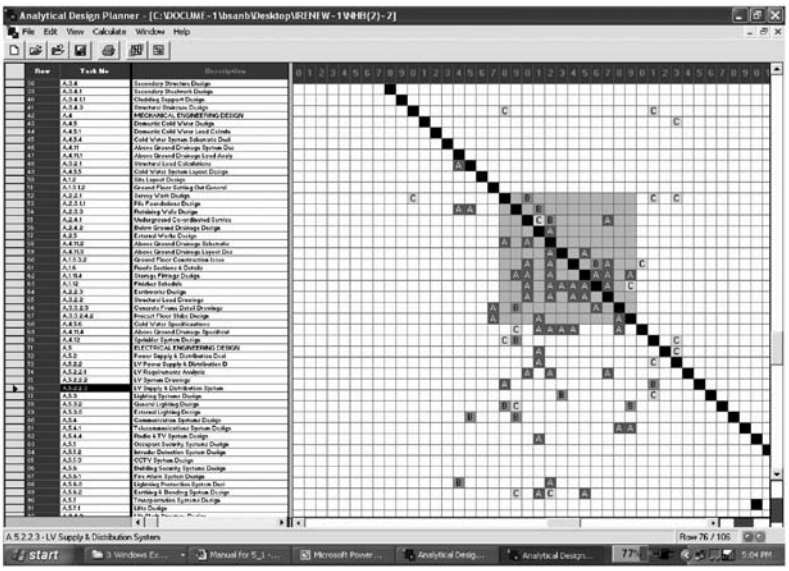

Figure 5 PHR (1)_OPT: Generic Building Design Model (Summary) for High Rise Residential Building (optimized)

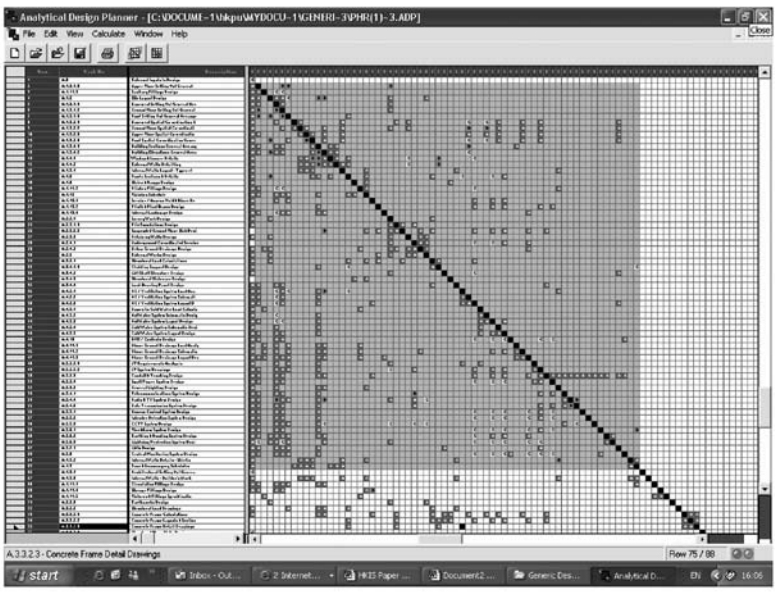

& bathing facilities; separate entrances for club house, car park and residential floors are provided; kitchens and bathrooms are fully furnished; cooking and water heating by main gas supply; window airconditioning units; car park vented by mechanical ventilation system; landscaped gardens; false ceilings in entrances and club house etc.

The Generic Building Design model was amended to reflect all the above features of a private high-rise residential building. This provided a new summary model PHR (0). PHR (0) were passed to designers, who requested to complete the "class" column by putting A, B or C to indicate the importance of the information to the completion of the design tasks. (Rating A indicating the greatest influence on the design activities; B a moderate influence whilst C indicated minimum importance.) The returns were compiled in the new summary model PHR (1).

This model was optimised in a similar way as before to form PHR (1)_OPT and analyzed to understand the design process and the subsequent changes in the sequences of information input from different disciplines to reduce iterative work and increase the efficiency of the design process. There were a total of 122 design tasks in the model. The pivotal tasks, (tasks with 16 outputs or above) were: Basement setting out GAs (32 outputs); Ground floor setting out GAs (31outputs); Upper floor setting out GAs (34 outputs); Roof setting out GAs (18 outputs); Building sections GAs (35 outputs); Building elevations GAs (16 outputs); Survey work design (16 outputs); Cold water system layout (16 outputs). 7 out of the above 9 tasks are architectural design tasks indicating that architectural design is the dominant discipline. The matrix analysis shows that civil engineering design has the least dependency on architectural design since they involve mainly external work and are less affected by the changes in the design of the building. Both structural and building services design depend considerably on architectural design.

After optimization, the main iteration loop is reduced to 65 design tasks (from No. 13 to 74), which is less than half in PHR (1). There are 22 architectural design tasks, 7 civil, 5 structural, 12 mechanical and 16 electrical engineering design tasks within the iteration loop. The impact of changes in architectural design is reduced. Building services design becomes more important. The Architect has to work along with Civil Engineer, Structural Engineer and Building Services Engineer in the detailed design as indicated in row nos. 13 to 74 of the matrix. Figure 5 shows part of the optimised building design model for Private High Rise Residential Building.

DISCUSSION

From the generic design model a number of different models were produced. These models form the basis for both this and future research.

The NHB (1) model, (New Harmony Building – first generation building), highlighted that the main cyclical activities are architectural design tasks (A.1) signifying that architectural design is the dominating discipline, activities related to architectural layout form the basis of the design, Architectural Spatial Co-ordination GA are important in designing internal layout. The Roof Spatial Co-ordination arrangements are not important because in this type of building the roof layout is usually simple, accommodating only water tanks and lift machine room. The A.1.12 Finishes Schedule and A.1.5.1 Internal Walls Layout are interdependent. Internal Wall Design is a requisite input to finishes selection.

The design process for a 'standard' building was examined by the production of a new model NHB (2), the NHB (0) model with the same design tasks but with importance of the information flows for 'standard' information set to a reduced level of importance. The optimized order of the design tasks is therefore different. The tasks relating to the structural and building services design assume a greater importance earlier in the design process.

For the private residential building there are more facilities, more services and more variation within the overall design sequence. Architectural design is still the dominant discipline; however optimization has re-arranged the design sequences to allow more coordination and working together for all design disciplines. The need for design co-ordination is more evident and the model and matrix highlight when co-ordination should take place.

Overall the modelling technique provides additional information to both the design and the construction team. This is of value in all three different cases. Feedback from the industry professionals who contributed to the modelling confirmed that the approach was of value in all three cases as additional information and the priority of information was provided to the designer. They recognized that the technique would also enable them to identify the impact of changes in design information or late delivery of design information.

ELIMINATING WASTE

There is now a recognition that the elimination of waste within the construction process must be addressed at all stages of the construction process. This includes initiatives to both eliminate physical waste produced as part of the construction process and waste in the form of the additional cost to the client of inefficient design and management processes. Practices developed in other industries, (Womack et al, 1990), have been extended to the Architectural, Engineering and Construction, (AEC), industries to good effect, (Alarcon et al, 1997, Cullen et al, 2005, Tommelain, 1999). The adoption of the information modelling techniques described in this paper has been a clear contributor to the reduction of waste within both the design process for different types of construction projects, (Austin et al, 1999, Austin et al, 2000, Waskett, P., 1999). By demonstrating that the modelling tools and techniques produced for these types of buildings may be extended to high-rise repetitive buildings, it confirms the opportunity for the use of the technique to be implemented and used to bring about the similar benefits within the design process. These benefits: the production; co-ordination; dissemination; monitoring and effective control of information, (Newton, 1995) are considered even more important in high rise residential buildings because problems and delays in the delivery of the correct information may affect many floors of the building.

The techniques may also be utilized to reduce the physical waste produced within the construction process. The construction industry is a major solid waste generator in Hong Kong. In the year 2000 it generated as much as 37,690 tones per day of construction and demolition waste, (Poon C.S. et al 2002). There is a general recognition by government, professionals, industry representatives that improvements must be made to this situation. The problem is not unique to Hong Kong. In the UK, ICE and CIRIA has undertaken extended studies (Ferguson et al, 1995, Coventry et al, 2001) which have looked at waste minimization through preventing and/or reducing the generation of waste at source. The Construction for Excellence study, (2001) identified the importance of dealing with waste at the design stage. This is now

generally recognised (see HK Housing Authority, Meeting Environmental Challenges for a Sustainable Future, 4th Edition, 2002/2003). Research by Poon et al, (see Management of Construction Waste in Public Housing Projects in Hong Kong, 2004) has reviewed the levels of construction waste in high rise residential building and the causes of these wastes. Minimising waste from the construction process at the design stage may be achieved by correct design details, avoiding late design modifications and incorporation of new design techniques. Information modelling and the use of the techniques described above can contribute fully to reducing construction waste. This includes waste relating to both permanent and temporary works.

CONCLUSIONS

There is a clear need to develop new tools and techniques that can help designers to analyse the information requirements in the design process and to make improvements in design management. Improvements in design management help to eliminate waste at both the design stage and the construction stage of a building. In this research, the adoption of information modelling and the analytical design planning technique has been extended to produce high rise models for both public and private residential buildings. The management of the design of such buildings benefits from this form of analysis irrespective of whether the building is being designed for the first time or is the repeat design of a 'standard' building. Different scenarios can be investigated between the extremes of 'new' i.e. first time design and 'standard' designs. These benefits extend to both private funded and government funded residential developments. Feedback and discussion of the results has been supportive and there is consensus that such approaches will provide design staff to make better informed decisions.

ACKNOWLEDGMENTS

Funding for this research has been supplied through the Research Grant Council of Hong Kong through allocation from the Central Earmarked Research Grant for 2004-2005 under Grant Number: PolyU 5157-04E. The authors wish to acknowledge the support from industry practitioners for the assistance in providing information and comments on the research.

REFERENCES

Alarcon, LF (ed), (1997), 'Lean Construction' published by Balkema, Rotterdam.

Austin, S, Baldwin, A, Li, B & Waskett, P, (1999,) "Analytical Design Planning Technique: A Model of the Detailed Building Design Process", *Design Studio*, vol. 20, issue 3, April, p. 279-296.

Austin, S, Baldwin, A, Li, B & Waskett, P, (2000), "Analytical Design Planning Technique (ADePT): A Dependency Structure Matrix Tool to Schedule the Building Design Process", *Construction Management and Economics*, vol. 18, p.173-182.

Austin, S, Baldwin, A, & Steele, J, (2002), "Improving Building Design through Integrated Planning and Control", *Engineering Construction and Architectural Management*, Issue 9, p.249-258.

Austin, S, & Hammond, J, (2004), "Introduction to Process Modelling", Loughborough University.

Baldwin, A, Austin, S, & Thorpe, A, (1998), "Planning Building Design by Simulating Information Flow", *Journal of Automation in Construction*, 8, p.149-163.

Baldwin, AN, Austin, AS, Poon, CS, Shen, LY, and Wong, I (2005) "Modelling Designers' Information Requirements to Reduce Waste in Repetitive High-Rise Building Construction". Proceedings of 2005 International Conference on Construction and Real Estate Management, Ed. WANG Yaowu and SHEN Qiping, Vol.1, published by China Architecture and Building Press, ISBN 7-112-07871-7, Malaysia, December 2005.

Browning, T, (2002), "Applying the Design Structure Matrix to System Decomposition and Integration Problems: A review and new directions".

Construction Industry Review Committee, (2001), 'Construction for Excellence' the report of the Construction Industry Review Committee, HKSAR Government.

Coventry, S, Shorter, B, and Kingsly, M, (2001), "Demonstrating Waste Minimization Benefits", CIRIA report 536 , CIRIA, London, 0 86017 536 7.

Cullen, PA, Butcher, R, Hickman, R, Keast, J, and Valadez, M, (2005), "The Application of Lean Principles to In-Service Support: A Comparison Between Construction and the Aerospace and Defence Sectors", *Lean Construction Journal*, Volume 2, Issue 1.

Ferguson, J, Kermode, N, Nash, CL, Sketch, WAJ and Huxford, RP, (1995), Managing and Minimizing Construction Waste – A Practical Guide, Institution of Civil Engineers, London.

Hong Kong Housing Authority, (2002/2003), *Meeting Environmental Challenges for a Sustainable Future*, 4th Edition.

Hong Kong Housing Authority, (2007), *The Annual Report 2005/06 of the Hong Kong Housing Authority* published by the Hong Kong Housing Authority, Hong Kong SAR.

Hong Kong Housing Department: Work Group, (1997) Drawings of New Harmony design.

Hong Kong Housing Department (2003), *Master Process Manual*, Issue 2.

Maheswari, J, & Varghese, K, (2005), "Project Scheduling Using Dependency Structure Matrix", *International Journal of Project Management*, 23, p.223-230.

Newton, A, (1995), The Planning and Management of Detailed Building Design, PhD Thesis, Loughborough University, U.K.

Poon, CS and Jaillon, J, (2002), A Guide for Minimizing Construction and Demolition Waste at the Design Stage. 1st Ed. The Hong Kong Polytechnic University, Hong Kong, p. 221.

Poon, CS, Yu, ATW, Wong, SW & Cheung, E, *Management of Construction Waste in Public Housing Projects in Hong Kong*, Construction Management and Economics, vol. 22, Sept. 2004, p.675-689.

Sandkull, B, & Danilovic, M, (2005), "The Use of Dependency Matrix and Domain Mapping Matrix in Managing Uncertainty in Multiple Project Situations", *International Journal of Project Management*, 23, p.193-203.

Tommelain, ID, (1999), "Proceedings of the 7th Conference of the International Group for Lean Construction", 13-15 August, 1998, Guaruja.

Waskett, P (1999), "Management of the Design Process", PhD Thesis, Loughborough University, UK.

Womack, JP, Jones, DT, and Roos, D, (1990), "The Machine that Changed the World", Rawson Associates, Simon Schuster, New York.